CMO	PNEUMATIC CYLINDER	N°: DEFCIL DATE: 2-1-97 Rev:	PAGE 1/1

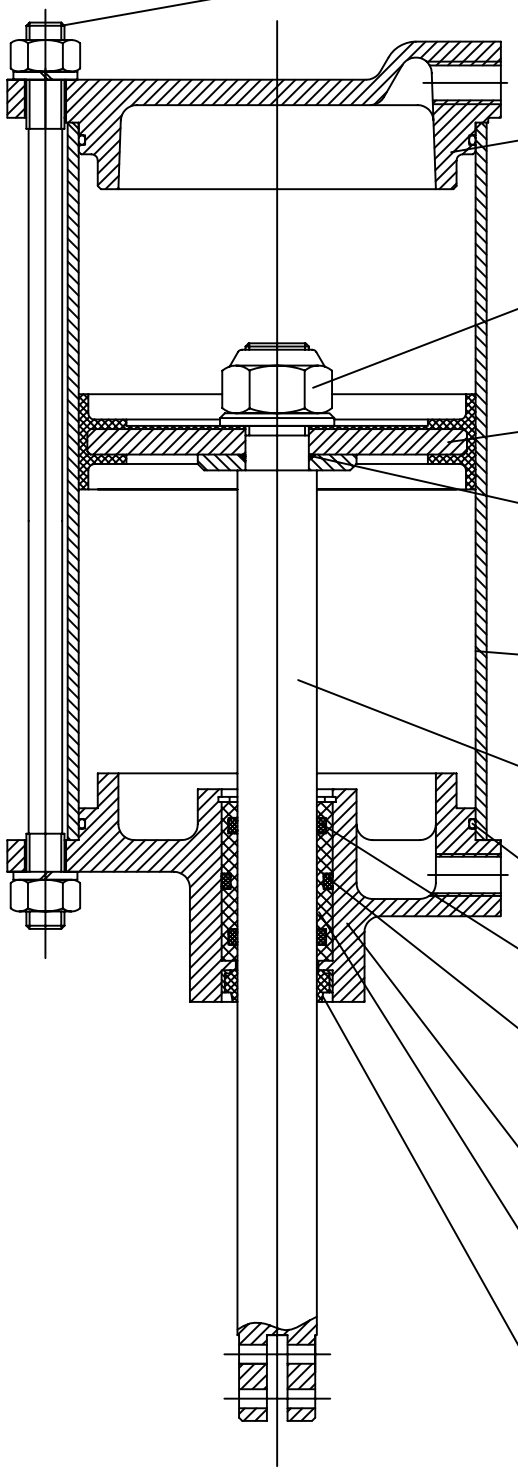

18 TIE RODS FOR COVER COUPLING IN ZINC COATED STEEL.

15 HIGH RESISTANCE NODULAR IRON CYLINDER COVER.

SELF LOCKING NUT TO ASURE PISTON FIXATION.

20 SOLID CASTED PISTON GUM MOULDED ON STEEL

24 NITRILE O-RING

16 DRAWN ALUMINIUM JACKET OXIDATION RESISTANT.

17 CYLINDER PISTON ROD IN STAINLESS STEEL

21 NITRILE O-RINGS.

22 NITRILE O-RINGS.

23 NITRILE O-RINGS.

14 HIGH RESISTANCE NODULAR IRON CYLINDER HEAD.

26 PISTON ROD GUIDE IN RCH 1000 FOR LOW FRICTION.

25 PISTON ROD SCRAPER NITRILE MOULDED ON STEEL